BP-MF400 Datasheet

MEDIUM-FLOW BACK PRESSURE REGULATOR

PRESSURE TECH

Gas | Liquid | Diaphragm | Piston | Max Rating: 10 bar (145 psi) | Max Inlet Control: 10 bar (145 psi) | Cv 3.0

INTRODUCING THE BP-MF400...

The BP-MF400 is a diaphragm-sensed medium-flow back pressure regulator for gas or liquid applications. The liquid version includes a PEEK™ seat, whilst the gas version features PCTFE seating.

This accurate regulator controls inlet pressure and vents excess pressure back via the threaded NPT or BSP outlet port of up to 1” diameter.

SPECIFICATION

Max. Rating	10 bar (145 psi)
Max. Inlet Control	Up to 10 bar (145 psi)
Design Proof Pressure	150% max. working pressure
Seat Leakage	In accordance with ANSI/FCI 70-3
Weight	5.5kg (12.1lbs)

STANDARD MATERIALS OF CONSTRUCTION

PART	MATERIALS
Body and Bonnet	ASTM A479 316/316L Stainless Steel (UNS S31600/S31603)
Main Valve Pin	ASTM A479 316/316L Stainless Steel
Seat	PEEK™ (450G)
	PCTFE (Kel-F)
Valve Spring	ASTM A240 301 Stainless Steel (UNS S30100)
Diaphragm	NBR N70 (Nitrile Buna N)
Handwheel	Nylon
O-Rings	NBR N70 (Nitrile Buna N)
	FKM/FPM (Viton)
Loading Spring	Alloy Spring Steel

Note: Pressure regulator rating may be limited by connection type, Cv and/or seat material. Contact the office for specific pressure or temperature requirements.

FEATURES AND BENEFITS

1 ELASTOMERIC DIAPHRAGM

For accurate control of outlet pressures up to 10 bar (145 psi).

2 EASY ACCESS TO SEAT CARTRIDGE

Simplified servicing through base of regulator.

3 FLANGE-TYPE BONNET

Quick and easy removal for maintenance.

Product availability and specifications contained herein are subject to change without notice. Consult local distributor or factory for potential revisions and/or service related issues.
Pressure Tech Ltd support with product selection recommendations only - it is the users responsibility to ensure the product is suitable for their specific application requirements.

PRESSURE TECH LTD
Unit 24, Graphite Way, Hadfield, Glossop, Derbyshire, UK, SK13 1QH
+44 (0)1457 899 307 | sales@pressure-tech.com | www.pressure-tech.com

DESIGNED, MANUFACTURED AND BUILT IN THE UK

© 2025 Pressure Tech Ltd. All Rights Reserved.

DRAWINGS AND INSTALLATION DIMENSIONS

Dimensions shown for standard configurations only - please contact the office for other options.

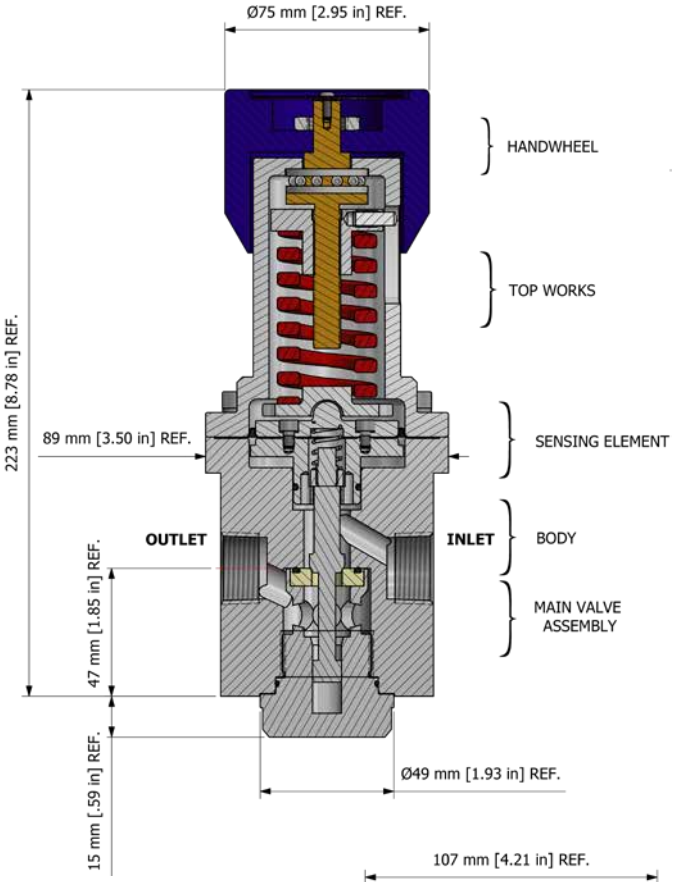

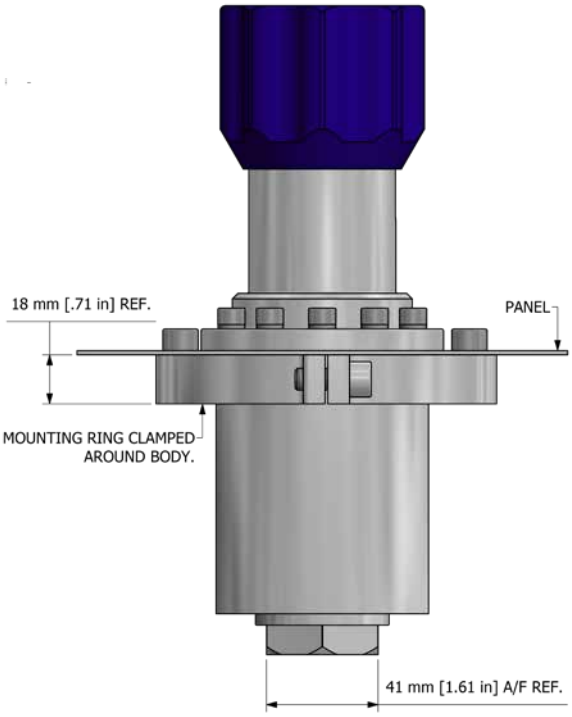

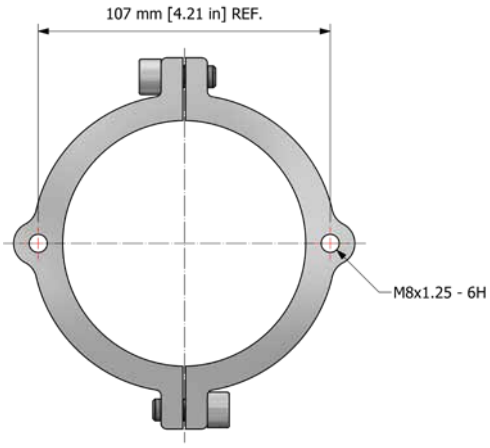

PT-C-061-006-RING
STAINLESS STEEL
PANEL MOUNT RING

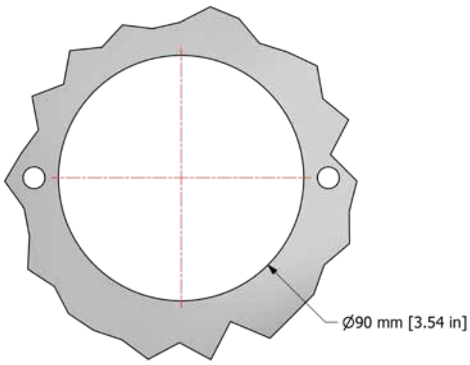

PANEL CUT OUT

Note:

All gauge ports are 1/4" NPT as standard.

Product availability and specifications contained herein are subject to change without notice. Consult local distributor or factory for potential revisions and/or service related issues.
Pressure Tech Ltd support with product selection recommendations only - it is the users responsibility to ensure the product is suitable for their specific application requirements.

PRESSURE TECH LTD
Unit 24, Graphite Way, Hadfield, Glossop, Derbyshire, UK, SK13 1QH
+44 (0)1457 899 307 | sales@pressure-tech.com | www.pressure-tech.com

DESIGNED, MANUFACTURED AND BUILT IN THE UK

© 2025 Pressure Tech Ltd. All Rights Reserved.

FLOW CURVE

Please contact the office for further information.

PORTING CONFIGURATIONS

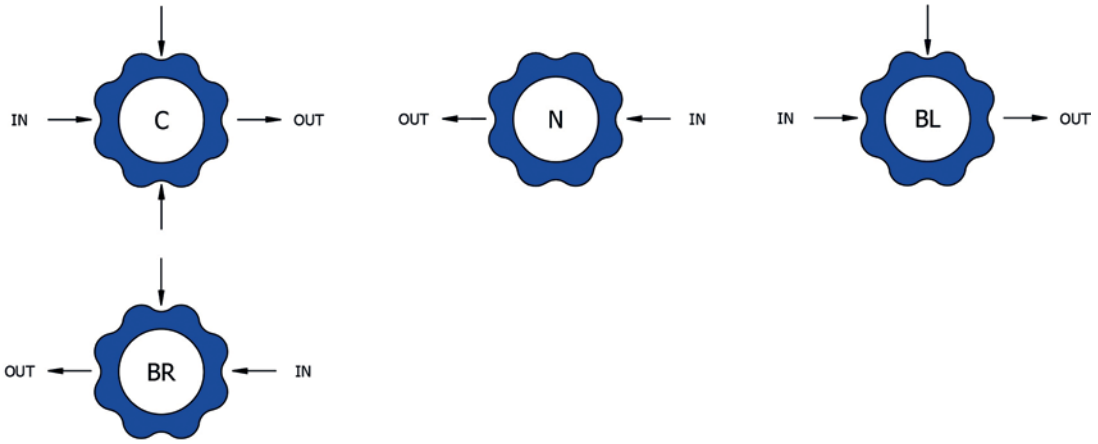

Note:
Additional porting configurations are available - please contact the office for further information.

Product availability and specifications contained herein are subject to change without notice. Consult local distributor or factory for potential revisions and/or service related issues.
Pressure Tech Ltd support with product selection recommendations only - it is the users responsibility to ensure the product is suitable for their specific application requirements.

PRESSURE TECH LTD
Unit 24, Graphite Way, Hadfield, Glossop, Derbyshire, UK, SK13 1QH
+44 (0)1457 899 307 | sales@pressure-tech.com | www.pressure-tech.com

DESIGNED, MANUFACTURED AND BUILT IN THE UK

© 2025 Pressure Tech Ltd. All Rights Reserved.

BP-MF400 Datasheet

MEDIUM-FLOW BACK PRESSURE REGULATOR

PRESSURE TECH

● Gas ● Liquid | ● Diaphragm ○ Piston | Max Rating: 10 bar (145 psi) | Max Inlet Control: 10 bar (145 psi) | Cv 3.0

ORDERING INFORMATION

To build a Pressure Tech part number, simply combine the characters identified below in sequence:

BP-MF400G – 3 – S – 10S – N – 06N – N – XXX

REGULATOR

BP-MF400G – Gas
BP-MF400H – Liquid

CV VALUE

3 – 3.0

BODY MATERIAL**

S – ASTM A479 316/316L Stainless Steel

CONTROL PRESSURE

05 – Up to 5 bar (75 psi)
10 – Up to 10 bar (145 psi)

LOADING MECHANISM

S – Spring-Loaded

MODIFICATIONS*

Contact the office for information.

PORTING CONFIGURATION

N - No gauge ports
Refer to page 3 for porting options.

IN/OUT CONNECTION SIZE**

04 – 1/2”
06 – 3/4”
08 – 1”

IN/OUT CONNECTION TYPE**

N – NPT
B – BSPP

O-RING MATERIAL**

N – NBR
V – FKM/FPM
W – FKM/FPM (Low Temp & AED)

OPTIONAL EXTRAS

	PART NUMBER	DESCRIPTION
Service Kit	SRK-BP-MF400...	Various options available
Panel Mounting Ring	PT-C-061-006-RING	Stainless Steel panel mount ring

Note: Ancillary equipment also available

TRADEMARK: PEEK™ is a trademark of Victrex PLC

* Where applicable
** Other materials/connections may be available - please contact the office

Product availability and specifications contained herein are subject to change without notice. Consult local distributor or factory for potential revisions and/or service related issues.
Pressure Tech Ltd support with product selection recommendations only - it is the users responsibility to ensure the product is suitable for their specific application requirements.

PRESSURE TECH LTD
Unit 24, Graphite Way, Hadfield, Glossop, Derbyshire, UK, SK13 1QH
+44 (0)1457 899 307 | sales@pressure-tech.com | www.pressure-tech.com

DESIGNED, MANUFACTURED AND BUILT IN THE UK

© 2025 Pressure Tech Ltd. All Rights Reserved.

Haldatec
Phone: +61 3 9872 5822
Email: sales@haldatec.com.au
Website: www.haldatec.com.au