MF300T Datasheet

MEDIUM-FLOW TRACKING PRESSURE REGULATOR

PRESSURE TECH

Gas | Liquid | Diaphragm | Piston | Self-Venting | Non-Venting | Max Inlet: 300 bar (4,350 psi) | Max Outlet: 25 bar (360 psi) | Cv 1.0 / 2.0

HT BRASS SPRING-LOADED OPTION

316SS DOME-LOADED OPTION

INTRODUCING THE MF300T...

The MF300T is a piston-sensed self-venting regulator for gas or liquid applications with 1:1 tracking ratio to reference pressure.

The MF300T offers a **balanced main valve** as standard and features an anti-tamper locking cap as standard with its reference port in an adjustable collar to suit your application. The MF300T's 1/2" and 3/4" designs have been subjected to Oxygen Ignition Tests to EN ISO 7291 standard.

STANDARD MATERIALS OF CONSTRUCTION

PART	MATERIALS
Body and Bonnet	HT Brass
Main Valve Pin	ASTM A479 316/316L Stainless Steel (UNS S31600/S31603)
Soft Seat	PCTFE (Kel-F)
Valve Spring	ASTM A479 S42 Stainless Steel (UNS S43100)
Piston	ASTM A479 316/316L Stainless Steel
O-Rings	FKM/FPM (Viton)
Loading Spring	Alloy Spring Steel

SPECIFICATION

Main Seat	Service	Valve Type	Inlet Pressure
PCTFE	Gas or Liquid	Unbalanced*	≤ 50 bar (725 psi)
PEEK™	Liquid	Unbalanced	
PCTFE	Gas	Balanced	> 50 bar (725 psi) to 300 bar (4,350 psi)
PEEK™	Gas or Liquid		

Vent Seat	Inlet Pressure
PCTFE	≤ 100 bar (1,450 psi)**
PEEK™	> 100 bar (1,450 psi)

Spring Adjust. Outlet Range	Up to 25 bar (360 psi)
Reference Line MWP	100 bar (1,450 psi)
Design Proof Pressure	150% max. working pressure
Seat Leakage	In accordance with ANSI/FCI 70-3
Weight	6kg (13.2lbs)

Notes: Pressure regulator rating may be limited by connection type, Cv and/or seat material. Contact the office for specific pressure or temperature requirements.

* Balanced valve can be used for certain applictions
** Modification required

FEATURES AND BENEFITS

1 ANTI-TAMPER LOCKING CAP

Helps deter unwanted alterations to the pressure regulator.

2 ASTM G93 LEVEL C**

Wetted parts cleaned and degreased to ASTM G93 level C.

3 ADJUSTABLE REFERENCE PORT POSITION

Alter to suit the requirements of your application.

4 BALANCED MAIN VALVE DESIGN

Improved control across the pressure range.

Product availability and specifications contained herein are subject to change without notice. Consult local distributor or factory for potential revisions and/or service related issues.
Pressure Tech Ltd support with product selection recommendations only - it is the users responsibility to ensure the product is suitable for their specific application requirements.

PRESSURE TECH LTD
Unit 24, Graphite Way, Hadfield, Glossop, Derbyshire, UK, SK13 1QH
+44 (0)1457 899 307 | sales@pressure-tech.com | www.pressure-tech.com
DESIGNED, MANUFACTURED AND BUILT IN THE UK

MF300T Datasheet

MEDIUM-FLOW TRACKING PRESSURE REGULATOR

PRESSURE TECH

Gas | Liquid | Diaphragm | Piston | Self-Venting | Non-Venting | Max Inlet: 300 bar (4,350 psi) | Max Outlet: 25 bar (360 psi) | Cv 1.0 / 2.0

DRAWINGS AND INSTALLATION DIMENSIONS

Dimensions shown for 1/2” NPT option and standard configurations only - please contact the office for other options.

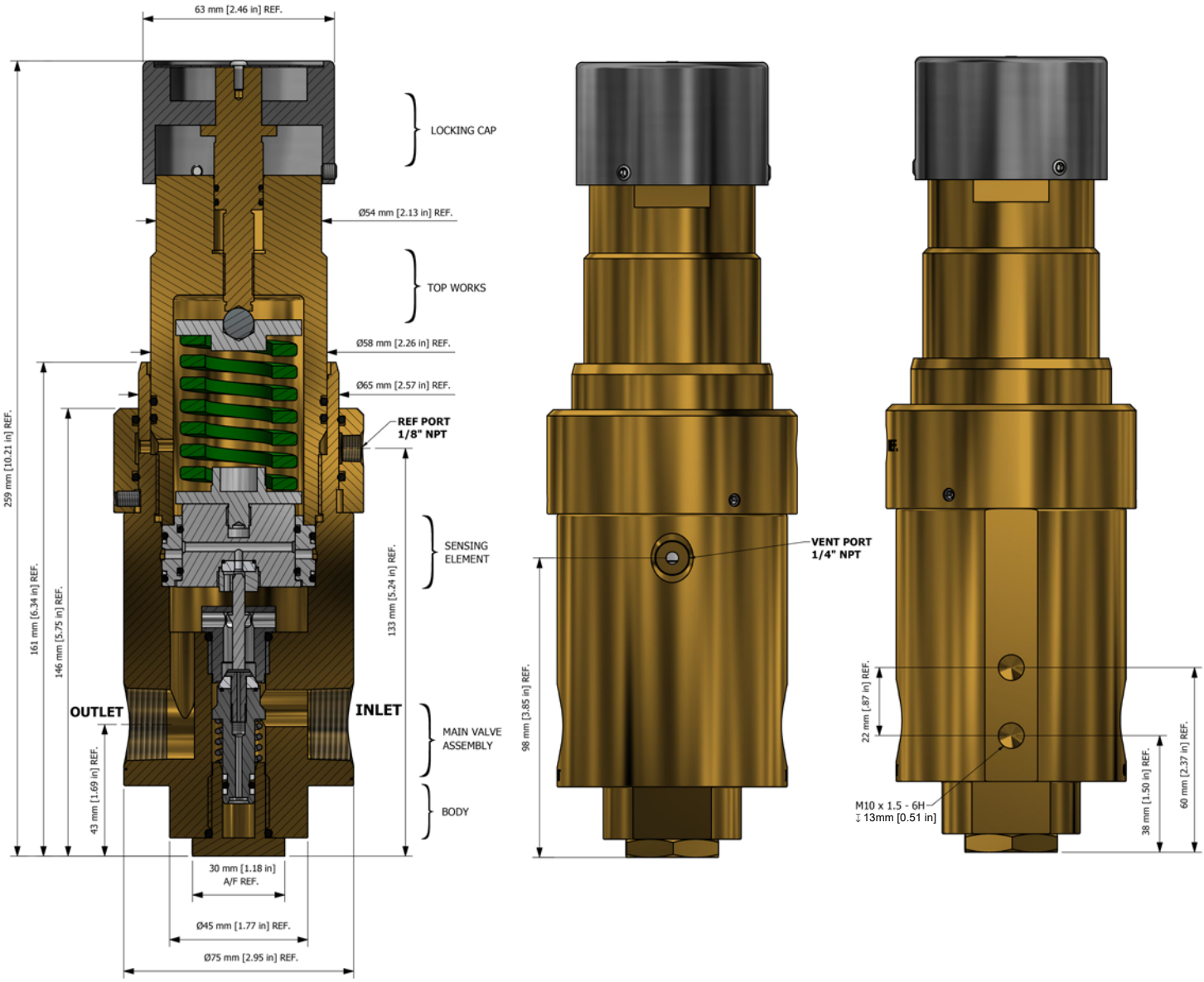

Note:

All gauge ports are 1/4” NPT as standard.

Product availability and specifications contained herein are subject to change without notice. Consult local distributor or factory for potential revisions and/or service related issues.
Pressure Tech Ltd support with product selection recommendations only - it is the users responsibility to ensure the product is suitable for their specific application requirements.

PRESSURE TECH LTD
Unit 24, Graphite Way, Hadfield, Glossop, Derbyshire, UK, SK13 1QH
+44 (0)1457 899 307 | sales@pressure-tech.com | www.pressure-tech.com
DESIGNED, MANUFACTURED AND BUILT IN THE UK

FLOW CURVE

Please contact the office for further information.

PORTING CONFIGURATIONS

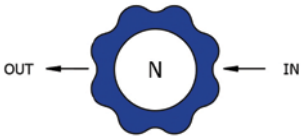

Note:
Additional porting configurations are available - please contact the office for further information.

Product availability and specifications contained herein are subject to change without notice. Consult local distributor or factory for potential revisions and/or service related issues.
Pressure Tech Ltd support with product selection recommendations only - it is the users responsibility to ensure the product is suitable for their specific application requirements.

PRESSURE TECH LTD
Unit 24, Graphite Way, Hadfield, Glossop, Derbyshire, UK, SK13 1QH
+44 (0)1457 899 307 | sales@pressure-tech.com | www.pressure-tech.com
DESIGNED, MANUFACTURED AND BUILT IN THE UK

MF300T Datasheet

MEDIUM-FLOW TRACKING PRESSURE REGULATOR

PRESSURE TECH

Gas | Liquid | Diaphragm | Piston | Self-Venting | Non-Venting | Max Inlet: 300 bar (4,350 psi) | Max Outlet: 25 bar (360 psi) | Cv 1.0 / 2.0

ORDERING INFORMATION

To build a Pressure Tech part number, simply combine the characters identified below in sequence:

MF300T – 2 – B – 20S – N – 04N – N – SV – XXX

REGULATOR

MF300T

CV VALUE

1 – 1.0
2 – 2.0

BODY MATERIAL**

B – HT Brass (CW721R)

SPRING ADJUST. OUTLET RANGE

05 – Up to 5 bar (75 psi)
15 – Up to 15 bar (215 psi)
20 – Up to 20 bar (290 psi)
25 – Up to 25 bar (360 psi)

LOADING MECHANISM

S – Spring-Loaded

MODIFICATIONS*

Contact the office for information.

VENTING

SV – Self-Venting

PORTING CONFIGURATION

N – No gauge ports
Refer to page 3 for porting options.

INLET/OUTLET CONNECTION

04N – 1/2” NPT
06N – 3/4” NPT

O-RING MATERIAL**

N – NBR
V – FKM/FPM
W – FKM/FPM (Low Temp & AED)

OPTIONAL EXTRAS

	PART NUMBER	DESCRIPTION
Service Kit	SRK-MF300T-2-B...	Various options available

Note: Ancillary equipment also available

* Where applicable
** Other materials may be available

Product availability and specifications contained herein are subject to change without notice. Consult local distributor or factory for potential revisions and/or service related issues.
Pressure Tech Ltd support with product selection recommendations only - it is the users responsibility to ensure the product is suitable for their specific application requirements.

PRESSURE TECH LTD
Unit 24, Graphite Way, Hadfield, Glossop, Derbyshire, UK, SK13 1QH
+44 (0)1457 899 307 | sales@pressure-tech.com | www.pressure-tech.com
DESIGNED, MANUFACTURED AND BUILT IN THE UK

Haldatec
Phone: +61 3 9872 5822
Email: sales@haldatec.com.au
Website: www.haldatec.com.au