SS691 Datasheet

SUBSEA HYDRAULIC PRESSURE REGULATOR

PRESSURE TECH

Gas | Liquid | Diaphragm | Piston | Self-Venting | Non-Venting | Max Inlet: 1,034 bar (15,000 psi) | Max Outlet: 690 bar (10,000 psi) | Cv 0.1

INTRODUCING THE SS691...

The SS691 is a piston-sensed low-flow subsea pressure regulator with ceramic seating for water-based hydraulic oil applications and systems. With the balanced main valve option it can provide stable control under varying inlet pressures and cope with higher flow rates.

Operating at depths of up to 3,000 metres (10,000ft), the SS691 uses either the external seawater pressure as a reference or works within a sealed chamber to remain completely unaffected by atmospheric conditions.

SPECIFICATION

Max. Rated Inlet Pressure	1,034 bar (15,000 psi)
Outlet Ranges	Up to 690 bar (10,000 psi)
Design Proof Pressure	150% max. working pressure
Seat Leakage	In accordance with ANSI/FCI 70-3
Weight	10.5kg (23.1lbs)

STANDARD MATERIALS OF CONSTRUCTION

PART	MATERIALS
Body and Bonnet	ASTM A479 Duplex Stainless Steel (UNS S31803)
Main Valve Pin	ASTM A479 Duplex Stainless Steel (UNS S31803)
	Ceramic (Zirconia)
Seat	Ceramic (Zirconia)
Valve Spring	MP35N (UNS R30035)
Piston	ASTM A479 Duplex Stainless Steel (UNS S31803)
Locking Cap	ASTM A479 Duplex Stainless Steel (UNS S31803)
O-Rings	NBR N70 (Nitrile Buna N)
Loading Spring	MP35N (UNS R30035)

Note: Pressure regulator rating may be limited by connection type, Cv and/or seat material. Contact the office for specific pressure or temperature requirements.

FEATURES AND BENEFITS

1 SUITABLE FOR DEEPER WATERS

Can operate at depths of up to 3,000 metres (10,000ft).

2 ANTI-TAMPER LOCKING CAP

Cap prevents unwanted pressure adjustments to regulator.

3 MP35N VALVE SPRING

Very high strength with excellent corrosion resistance for sea water ref options.

4 OPTIONAL REMOTE OPERATION

Optional ROV handwheel or subsea multi-turn electric actuator.

Product availability and specifications contained herein are subject to change without notice. Consult local distributor or factory for potential revisions and/or service related issues.
Pressure Tech Ltd support with product selection recommendations only - it is the users responsibility to ensure the product is suitable for their specific application requirements.

PRESSURE TECH LTD
Unit 24, Graphite Way, Hadfield, Glossop, Derbyshire, UK, SK13 1QH
+44 (0)1457 899 307 | sales@pressure-tech.com | www.pressure-tech.com

DESIGNED, MANUFACTURED AND BUILT IN THE UK

© 2024 Pressure Tech Ltd. All Rights Reserved.

SS691 Datasheet

SUBSEA HYDRAULIC PRESSURE REGULATOR

Gas | Liquid | Diaphragm | Piston | Self-Venting | Non-Venting | Max Inlet: 1,034 bar (15,000 psi) | Max Outlet: 690 bar (10,000 psi) | Cv 0.1

DRAWINGS AND INSTALLATION DIMENSIONS

Dimensions shown for 3/8" Medium Pressure option and standard configurations only - please contact the office for other options.

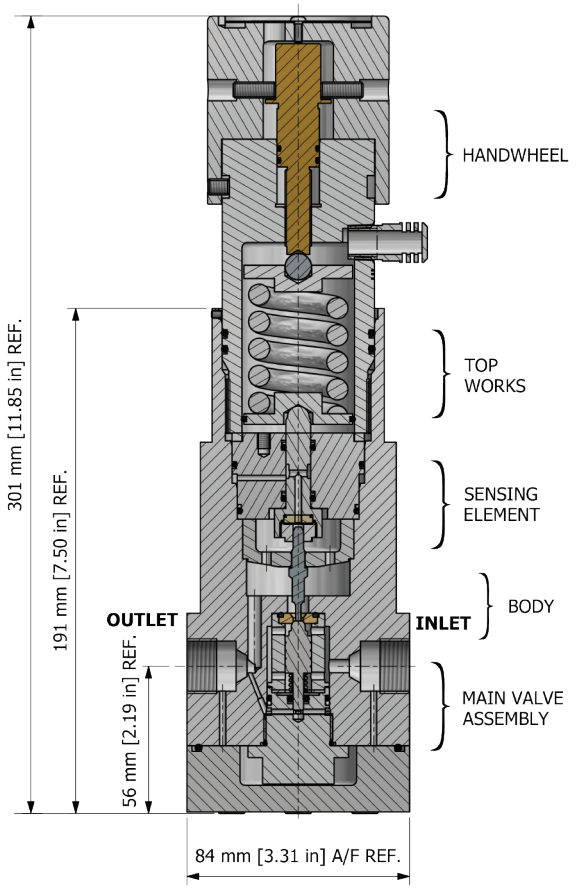

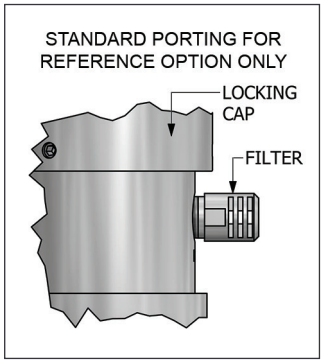

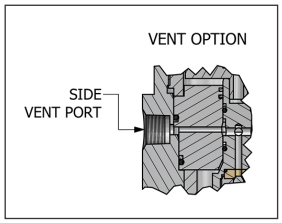

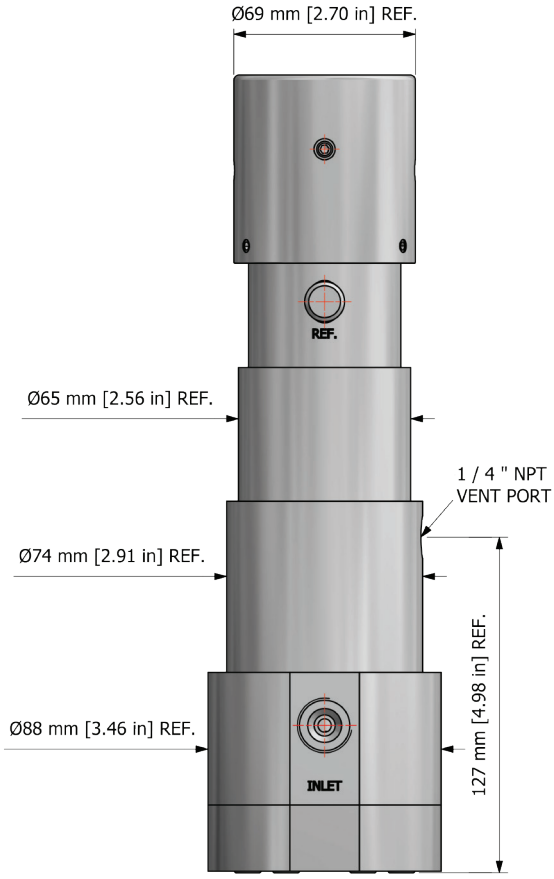

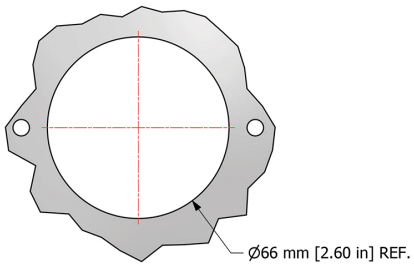

PANEL CUT OUT

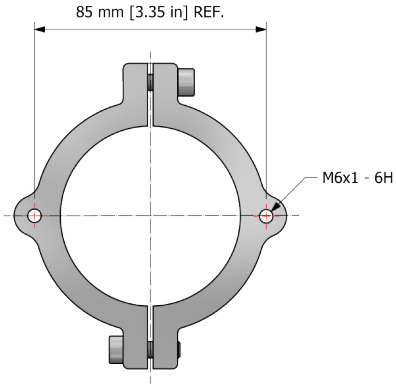

PT-C-061-003 - RING
STAINLESS STEEL
PANEL MOUNT RING

Product availability and specifications contained herein are subject to change without notice. Consult local distributor or factory for potential revisions and/or service related issues.
Pressure Tech Ltd support with product selection recommendations only - it is the users responsibility to ensure the product is suitable for their specific application requirements.

PRESSURE TECH LTD
Unit 24, Graphite Way, Hadfield, Glossop, Derbyshire, UK, SK13 1QH
+44 (0)1457 899 307 | sales@pressure-tech.com | www.pressure-tech.com

DESIGNED, MANUFACTURED AND BUILT IN THE UK

© 2024 Pressure Tech Ltd. All Rights Reserved.

FLOW CURVE

Please contact the office for further information.

PORTING CONFIGURATIONS

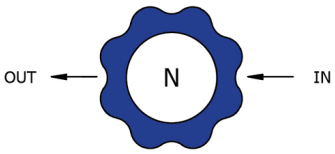

Note:

Additional porting configurations are available - please contact the office for further information.

Product availability and specifications contained herein are subject to change without notice. Consult local distributor or factory for potential revisions and/or service related issues.
Pressure Tech Ltd support with product selection recommendations only - it is the users responsibility to ensure the product is suitable for their specific application requirements.

PRESSURE TECH LTD

Unit 24, Graphite Way, Hadfield, Glossop, Derbyshire, UK, SK13 1QH

+44 (0)1457 899 307 | sales@pressure-tech.com | www.pressure-tech.com

DESIGNED, MANUFACTURED AND BUILT IN THE UK

© 2024 Pressure Tech Ltd. All Rights Reserved.

SS691 Datasheet

SUBSEA HYDRAULIC PRESSURE REGULATOR

PRESSURE TECH

Gas | Liquid | Diaphragm | Piston | Self-Venting | Non-Venting | Max Inlet: 1,034 bar (15,000 psi) | Max Outlet: 690 bar (10,000 psi) | Cv 0.1

ORDERING INFORMATION

To build a Pressure Tech part number, simply combine the characters identified below in sequence:

SS691 - 01 - D - 50SS - N - 03A - N - NV - XXX

MODEL

SS691

CV VALUE

05 – 0.05
01 – 0.1
03 – 0.3

BODY MATERIAL**

D – ASTM A479 Duplex Stainless Steel (UNS S31803)
D2 - ASTM A479 Super Duplex Stainless Steel (UNS S32760)

CONTROL PRESSURE

50 – Up to 50 bar (725 psi)
100 – Up to 100 bar (1,450 psi)
200 – Up to 200 bar (2,900 psi)
414 – Up to 414 bar (6,000 psi)
690 – Up to 690 bar (10,000 psi)

LOADING MECHANISM

SR – Spring Loaded with Reference to External Sea Water Pressure
SS – Spring Loaded Sealed Chamber - No Reference to External

MODIFICATIONS*

Contact the office for information.

VENTING

NV – Non-Venting
SV – Self-Venting

PORTING CONFIGURATION

N - No gauge ports

INLET/OUTLET CONNECTION**

03A – 3/8" Medium Pressure

O-RING MATERIAL**

E – EPDM
N – NBR
V – FPM/FKM

OPTIONAL EXTRAS

	PART NUMBER	DESCRIPTION
Service Kit	SRK-SS691...	Various options available
Panel Mounting Ring	PT-C-061-003-RING	-

Note: Ancillary equipment also available

TRADEMARK: Elgiloy® is a registered trademark of Elgiloy Specialty Metals
Hastelloy® is a registered trademark of Haynes International, Inc

* Where applicable
** Other connections/materials may be available

Product availability and specifications contained herein are subject to change without notice. Consult local distributor or factory for potential revisions and/or service related issues.
Pressure Tech Ltd support with product selection recommendations only - it is the users responsibility to ensure the product is suitable for their specific application requirements.

PRESSURE TECH LTD
Unit 24, Graphite Way, Hadfield, Glossop, Derbyshire, UK, SK13 1QH
+44 (0)1457 899 307 | sales@pressure-tech.com | www.pressure-tech.com

DESIGNED, MANUFACTURED AND BUILT IN THE UK

© 2024 Pressure Tech Ltd. All Rights Reserved.

Haldatec
Phone: +61 3 9872 5822
Email: sales@haldatec.com.au
Website: www.haldatec.com.au